METAL SEAT GATE VALVES

NON RISING STEM PN10-16

Ref. 122A-CIC / PN 10-16

Application
Water and sewage hydraulic installations.
Industrial applications.
Heating installations.

Approvals/Standards
Design: DIN 3352
Manufacture according to: EN 1074-2./GB/T12232-1989
Face to Face: EN 558-1 Series 14/15 (F4/F5)
Mounting between flanges: PN10/16 EN 1092-2, ISO 7005-2.
Pressure Tests acc. to EN 12266-1 Rate A. GB/T13927-1992
Pressure Tests: Body: 1,5 x PN. Seat: 1,1 x PN
EU directive 2014/68/EU:
Products excluded, article 1, § 2b up to DN300. Risk Category I MoD. A from DN350 to DN600

Certifications
CE

Range
DN50-800, PN10-16

GENERAL CHARACTERISTICS

Sizes DN50 to DN600.
Full bore.
Minimum head loss.
Low torque values.
Working pressure PN10/16.

WORKING CONDITIONS

Pressure ratings: 1.0 Mpa, 1.6 Mpa.
Working temperature: -10ºC + 120ºC

Nº	ITEM	MATERIAL
1	Body	GJS500-7
2	Disc	GJS500-7
3	Disc seat	Brass
4	Body seat	Brass
5	Nut	Brass
6	Stem	AISI 420
7	Gasket	Silicone
8	Rubber gasket	Silicone
9	O-ring	Silicone
10	Bush	Brass
11	Dust ring	Silicone
12	Bonnet	GJS500-7
13	Gland	GJS500-7
14	Handwheel	GJS500-7
15	Washer	A2-70
16	Bolt	A2-70
17	Bolt	Carbon steel
18	Bolt	A2-70
19	Gasket	PTFE
	RAL 5015 Painting	Epoxy 250 µm

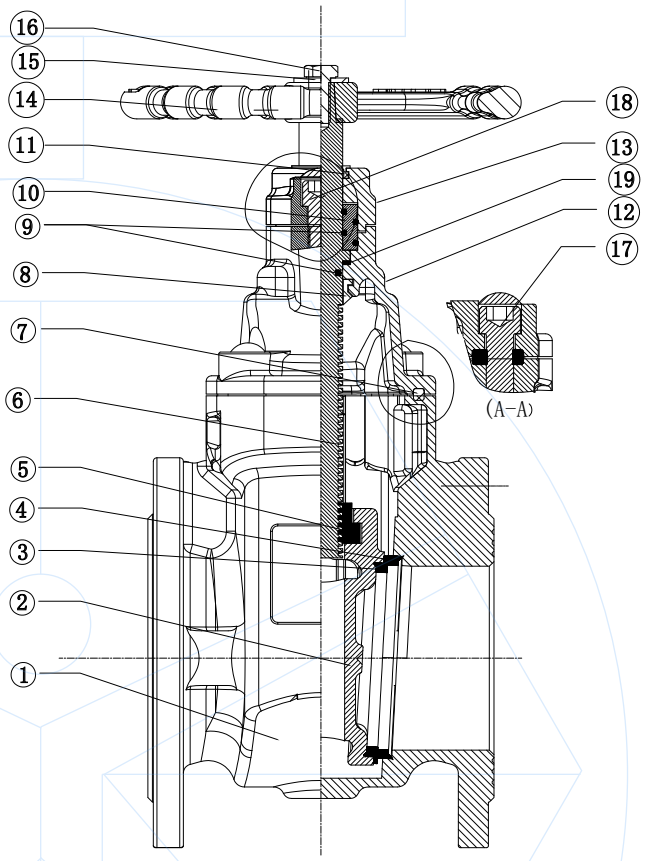

Components may be replaced with materials of equivalent or superior grade without prior notice, in accordance with our continuous improvement policy.

HEAD LOSS

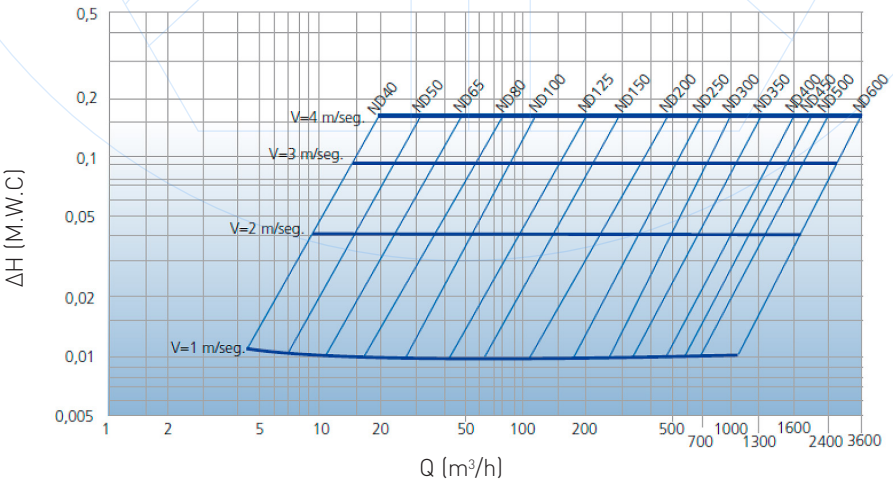

Disclaimer: Although care has been taken to ensure the accuracy of this information, users must verify product suitability for their specific application. Dimensions are nominal and should be confirmed if critical. No warranty, express or implied, is given unless stated in a formal agreement. Check more information at: davincivalves.com or contact us at: valves@davincivalves.com

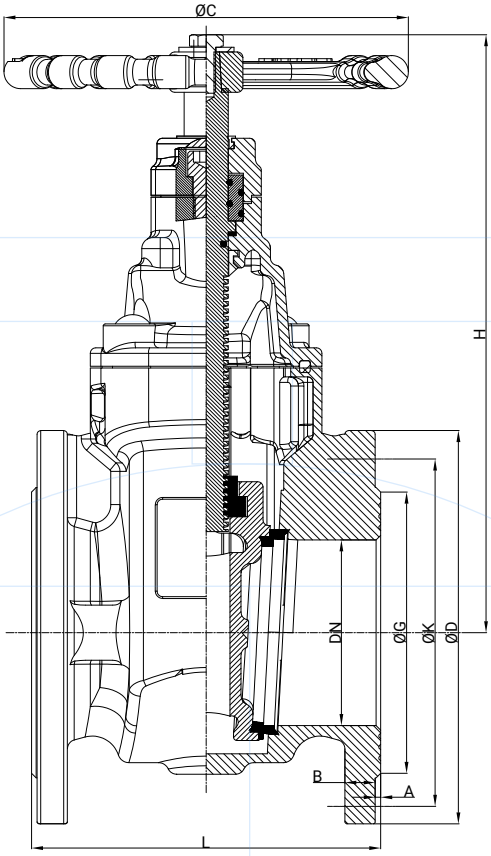

DN	L F4	H	ØC	A	B	D PN10	D PN16	K PN10	K PN16	n-Ød PN10	n-Ød PN16	G PN10	G PN16	Torque (N·m)	Nº Turns	Weight (kg)
50	150	245	200	3	19	165		125		4-19		99		50	15	14
65	170	268	200	3	19	185		145		4-19		118		70	19	16
80	180	290	220	3	19	200		160		8-19		132		90	22	18
100	190	315	250	3	19	220		180		8-19		156		110	27	23
125	200	370	280	3	19	250		210		8-19		184		125	23	36
150	210	410	280	3	19	285		240		8-23		211		150	27	40
200	230	495	320	3	20	340		295		8-23	12-23	266		200	36	63
250	250	628	350	3	22	405		350	355	12-23	12-28	319		250	44	105
300	270	680	450	4	25	460		400	410	12-23	12-28	370		300	52	148
350	290	751	550	4	27	520		460	470	16-23	16-28	429		350	61	229
400	310	940	550	4	28	580		515	525	16-28	16-31	480		400	69	274
450	330	1020	650	4	30	640		565	585	20-28	20-31	530	548	500	77	408
500	350	1125	650	4	32	670	715	620	650	20-28	20-34	582	609	550	86	486
600	390	1290	650	5	36	780	840	725	770	20-31	20-37	628	720	650	102	675
700	610	1720	--	5	40	910		840		24-31	24-37	794		1400	72	1280
800	660	1950	--	5	43	1025		950		24-34	24-40	901		1600	82	1520

Disclaimer: Although care has been taken to ensure the accuracy of this information, users must verify product suitability for their specific application. Dimensions are nominal and should be confirmed if critical. No warranty, express or implied, is given unless stated in a formal agreement. Check more information at: davincivalves.com or contact us at: valves@davincivalves.com

CONTACT US

DAVINCI VALVES
ORDER REQUEST

Head Office CHENGDU
Room 3208 Unit 1 Building 1,
No. 6 Zhiquan Section, Dongda Street
Jinjiang District, Chengdu, Sichuan
CHINA

+86 17340168233 +86 19302892712
valves@davincivalves.com

Europe Office MADRID
SPAIN
zuzana@davincivalves.com

WEBSITE
davincivalves.com

YOUR QUALITY WATER PROJECTS PARTNER
For professionals who look for more.