DAVINCI TECHNICAL DATA GUIDE

BUTTERFLY VALVES

WAFER 2 STEMS

Ref. 111A-DH / PN 10-16

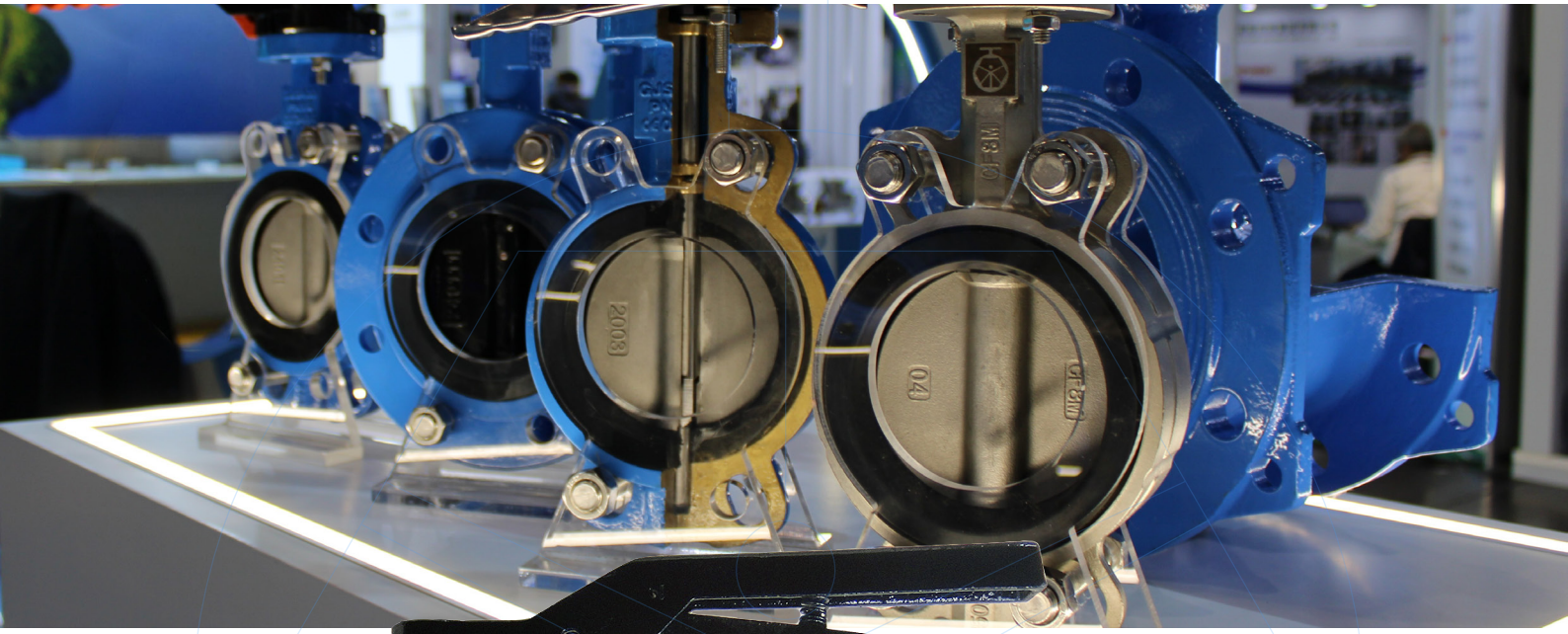

Application
Drinking water networks
HVAC installations
Pressurized air
Irrigation projects
Industrial applications

Approvals/Standards
Design: BS EN 593
Face to Face: EN 558-1 Series 20
Mounting between flanges: PN10/16 EN 1092-2, ISO 7005-2.
Pressure Tests acc. to EN 12266-1 Rate A. GB/T13927-1992
Pressure Tests: Body: 1,5 x PN. Seat: 1,1 x PN
EU directive 2014/68/EU:
Products excluded, article 1, § 2b up to DN300.
Risk Category I MoD. A from DN350 to DN600

Certifications
CE

Range
DN40-600, PN10-16

GENERAL CHARACTERISTICS

Concentric disc design.
Range from DN40 up to DN600
Long neck for heat-insulated installations.
100% Tightness in both directions.
Low head loss.
Two pieces shaft to reduce turbulences.
Cartridge seat for easy replacement.
Does not need gaskets for installation.
Top flange according to ISO 5211.
10 positions lever.

WORKING CONDITIONS

Maximum working pressure: 16 bar.
Working temperature:
- Min. temperature: -10ºC
- Max. temperature: 110ºC (130ºC temporarily)

Suitable media according to seat and disc material.

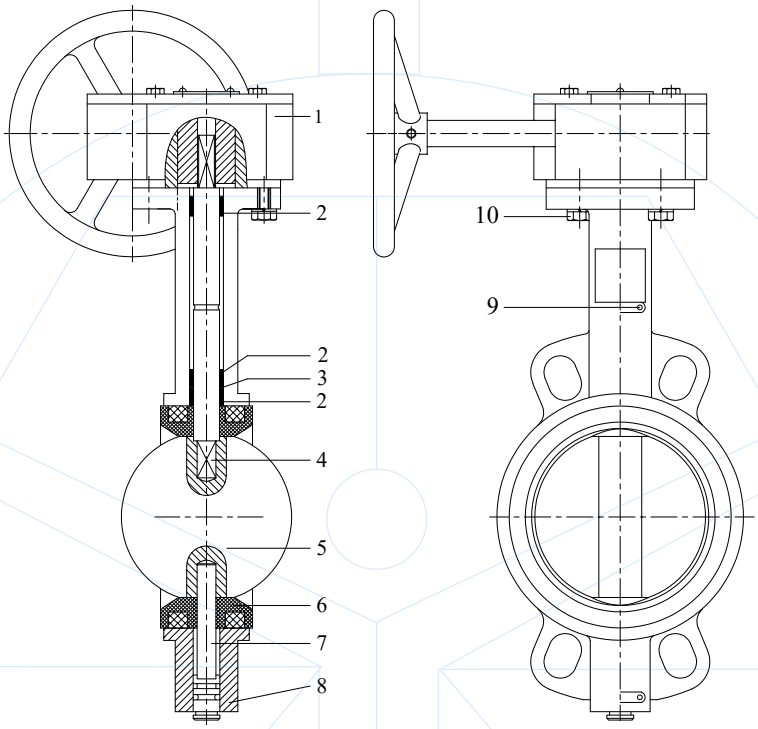

Nº	ITEM	MATERIAL (Standard / option)
1	Gearbox	
2	Bushing	PTFE / Bronze
3	O-ring	NBR, EPDM
4	Upper Stem	AISI 420
5	Disc	GJS400-7 / CF8M
6	Seat	EPDM / NBR, FKM, PTFE, EPDM HT
7	Lower Stem	AISI 420
8	Body	GJS400-15 / CF8M
9	Retaining bolt	A2
10	Bolts	CS8.8 / A2-70
	RAL 5015 Painting	Epoxy 250 µm for body
	RAL 9005 Painting	Epoxy 250 µm for disc

Components may be replaced with materials of equivalent or superior grade without prior notice, in accordance with our continuous improvement policy.

Disclaimer: Although care has been taken to ensure the accuracy of this information, users must verify product suitability for their specific application. Dimensions are nominal and should be confirmed if critical. No warranty, express or implied, is given unless stated in a formal agreement. Check more information at: davincivalves.com or contact us at: valves@davincivalves.com

DIMMENSIONS FOR VALVES BARE SHAFT

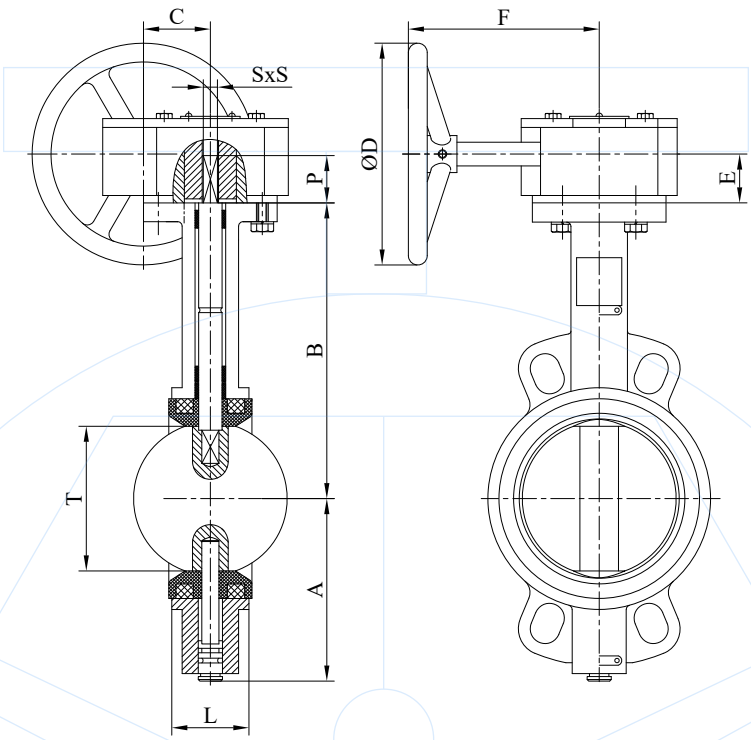

DN	L	A	B	E	F	ØD	S	P	T	ISO 5211	Torque (N·m)		Weight (kg)
											PN10	PN16	
40	33	79	145	27	144	138	9	32	27	F05	17.5	19.2	5.5
50	43	85	162	27	144	138	9	32	32	F05	17.5	19.2	5.5
65	46	98	174	27	144	138	9	32	47	F05	27.7	30.9	6.5
80	46	104	181	27	144	138	9	32	65	F05	36.7	39.6	7.7
100	52	123	200	27	144	138	11	32	90	F07	56.4	64.8	8.6
125	56	136	213	27	144	138	14	32	111	F07	85.4	101.8	11.6
150	56	148	225	27	144	138	14	32	145	F07	123.8	147.8	12.8
200	60	186	260	39	208	278	17	38	193	F07	206.6	240.0	24.5
250	68	212	292	39	208	278	22	38	241	F10	328.0	380.1	32.5
300	78	251	337	37	225	278	22	38	292	F10	478.1	538.0	44.1
350	78	277	368	37	225	278	22	45	325	F10	553.6	674.9	59
400	102	308	400	52	291	376	27	51	380	F16	870.0	993.4	93
450	114	342	422	52	291	376	27	51	428	F16	1297.0	1552.9	119
500	127	374	479	120	252	285	27	64	474	F16	1581.7	1804.6	169
600	154	459	562	135	295	376	36	70	575	F16	2878.8	3029.9	256

Disclaimer: Although care has been taken to ensure the accuracy of this information, users must verify product suitability for their specific application. Dimensions are nominal and should be confirmed if critical. No warranty, express or implied, is given unless stated in a formal agreement. Check more information at: davincivalves.com or contact us at: valves@davincivalves.com

DIMMENSIONS FOR LEVER AND MODELS

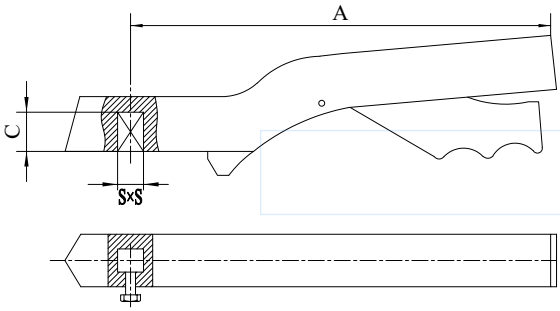

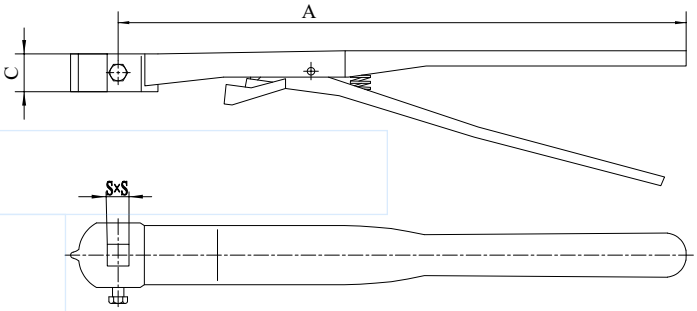

DN	A	S	C min
40-80	198	9	20
100	270	11	22
125-150	270	14	22
200	270	17	22

DN	A	S	C min
250-300	540	22	22

HA MODEL

Ductile cast iron handle.
Galvanized steel plate,
with 10 positions.
Low price.

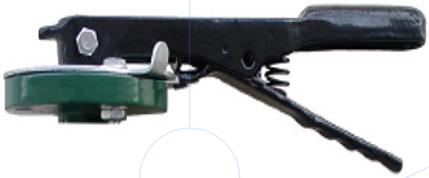

HB MODEL

Ductile cast iron handle.
Galvanized steel plate,
with 10 positions.
With hole for padlock.

HC MODEL

Carbon steel handle.
Galvanized steel plate,
with 10 positions.
Light design.

HD MODEL

Ductile cast iron handle.
ABS plate, with 10 positions.
Low price.

HE MODEL

Ductile cast iron handle.
Galvanized steel plate,
with 10 positions.
High resistance and endurance.

HF MODEL

Aluminum handle.
Aluminum plate, with 10 positions.
Light design and high resistance to
corrosion.

Disclaimer: Although care has been taken to ensure the accuracy of this information, users must verify product suitability for their specific application. Dimensions are nominal and should be confirmed if critical. No warranty, express or implied, is given unless stated in a formal agreement. Check more information at: davincivalves.com or contact us at: valves@davincivalves.com

GEARBOX DETAILS

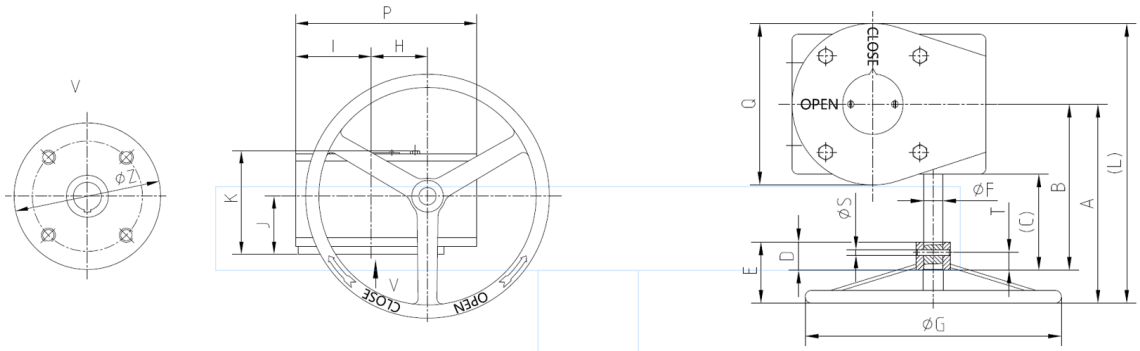

1 STAGE GEARBOX

DN	Torque N·m	Ratio	A	B	C	D	E	ØF	ØG	H	I	J	K	L	P	Q	ØS	T	ØZ
40-150	170	27 : 1	141	110	72	25	54	15.8	135	44	48	18	27.6	189	116	96	5	17.5	93
200-250	170	24 : 1	214	187	133	32	56	18.8	275	62	72.5	38	38.6	284	164	140	6	24	125
300-350	170	24 : 1	223	196	135	32	56	18.8	275	78	76.5	39.5	40.6	300	189	154	6	23.5	140
400-450	750	30 : 1	287	251	171	48	82	25	380	109	108.5	36	54.5	397	256	220	8	52	205

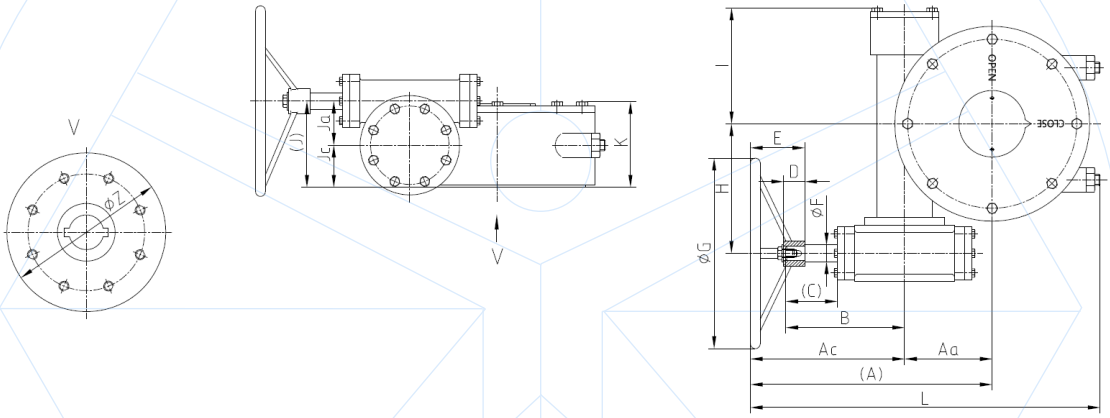

2 STAGES GEARBOX

DN	Torque N·m	Ratio	A	Aa	Ac	B	C	D	E	ØF	ØG	H	I	J	Ja	Jc	K	L	ØZ
500	3000	532:1	257	102	155	121	53	29	62	25	285	167	113	116	62	54	111	364	210
600	4000	640:1	301	126	175	142	57	32	66	25	380	200	140	131	66	65	134	438	276
700-800	8000	704:1	335	140	195	165	68	48	82	30	380	223	146	158	88	70	168	495	300
900-1100	15000	832:1	365	170	195	165	68	51	80	30	420	238	170	163	88	75	168	527	300
1200	20000	800:1	425	180	245	195	70	50	89	40	500	310	250	221	126	95	221	661	350

1 Stage model

ITEM	MATERIAL (Standard / option)
Body	Cast Iron / Ductile iron, Aluminun
Gears	Ductile iron / Al-Bronze
Shaft	Carbon steel / Stainless steel

2 Stages model

Disclaimer: Although care has been taken to ensure the accuracy of this information, users must verify product suitability for their specific application. Dimensions are nominal and should be confirmed if critical. No warranty, express or implied, is given unless stated in a formal agreement. Check more information at: davincivalves.com or contact us at: valves@davincivalves.com

FLOW CHARACTERISTICS GPM/ΔP

DN	DEGREE OPEN								
	10º	20º	30º	40º	50º	60º	70º	80º	90º
50	0.06	3	7	15	27	44	70	105	115
65	0.1	6	12	25	45	75	119	178	196
80	0.2	9	18	39	70	116	183	275	302
100	0.3	17	36	78	139	230	364	546	600
125	0.5	29	61	133	237	392	620	930	1022
150	0.8	45	95	205	366	605	958	1437	1579
200	2	89	188	408	727	1202	1903	2854	3136
250	3	151	320	694	1237	2049	3240	4859	5340
300	4	234	495	1072	1911	3162	5005	7507	8250
350	6	338	715	1549	2761	4568	7230	10844	11917
400	8	464	983	2130	3797	6282	9942	14913	16388
450	11	615	1302	2822	5028	8320	13168	19752	21705
500	14	791	1647	3628	6465	10698	16931	25396	27908
600	22	1222	2587	5605	9989	16528	26157	39236	43116
700	31	1703	3605	7813	13961	23037	36459	54689	60102
800	100	2436	5272	10636	18025	29440	47622	70876	77897
900	260	3050	6730	12740	20220	32500	52500	79600	87500
1000	313	3665	8089	15942	24299	39056	63093	95660	105154
1200	455	5365	11840	22400	30600	51200	92300	140000	154000

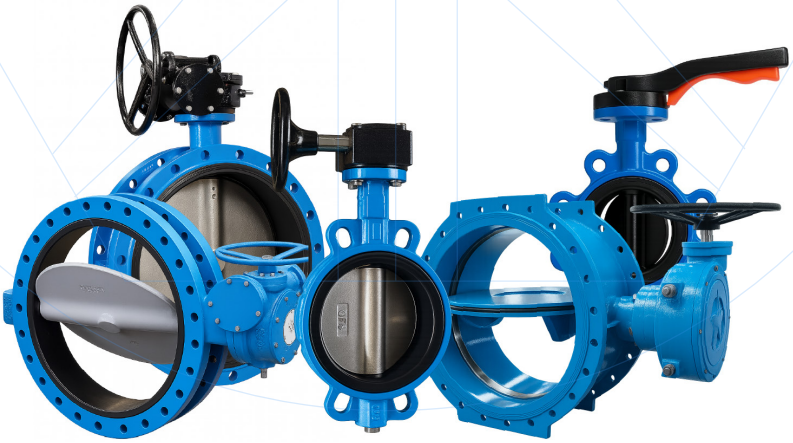

Disclaimer: Although care has been taken to ensure the accuracy of this information, users must verify product suitability for their specific application. Dimensions are nominal and should be confirmed if critical. No warranty, express or implied, is given unless stated in a formal agreement. Check more information at: davincivalves.com or contact us at: valves@davincivalves.com

CONTACT US

DAVINCI VALVES
ORDER REQUEST

Ref. 111A-DH / PN 10-16

Head Office CHENGDU
Room 3208 Unit 1 Building 1,
No. 6 Zhiquan Section, Dongda Street
Jinjiang District, Chengdu, Sichuan
CHINA

+86 17340168233 +86 19302892712
valves@davincivalves.com

Europe Office MADRID
SPAIN
zuzana@davincivalves.com

WEBSITE
davincivalves.com

YOUR QUALITY WATER PROJECTS PARTNER
For professionals who look for more.