DAVINCI TECHNICAL DATA GUIDE

BUTTERFLY VALVES

CONCENTRIC FLANGED SERIES 13

Ref. 114A-WT / PN 10-16

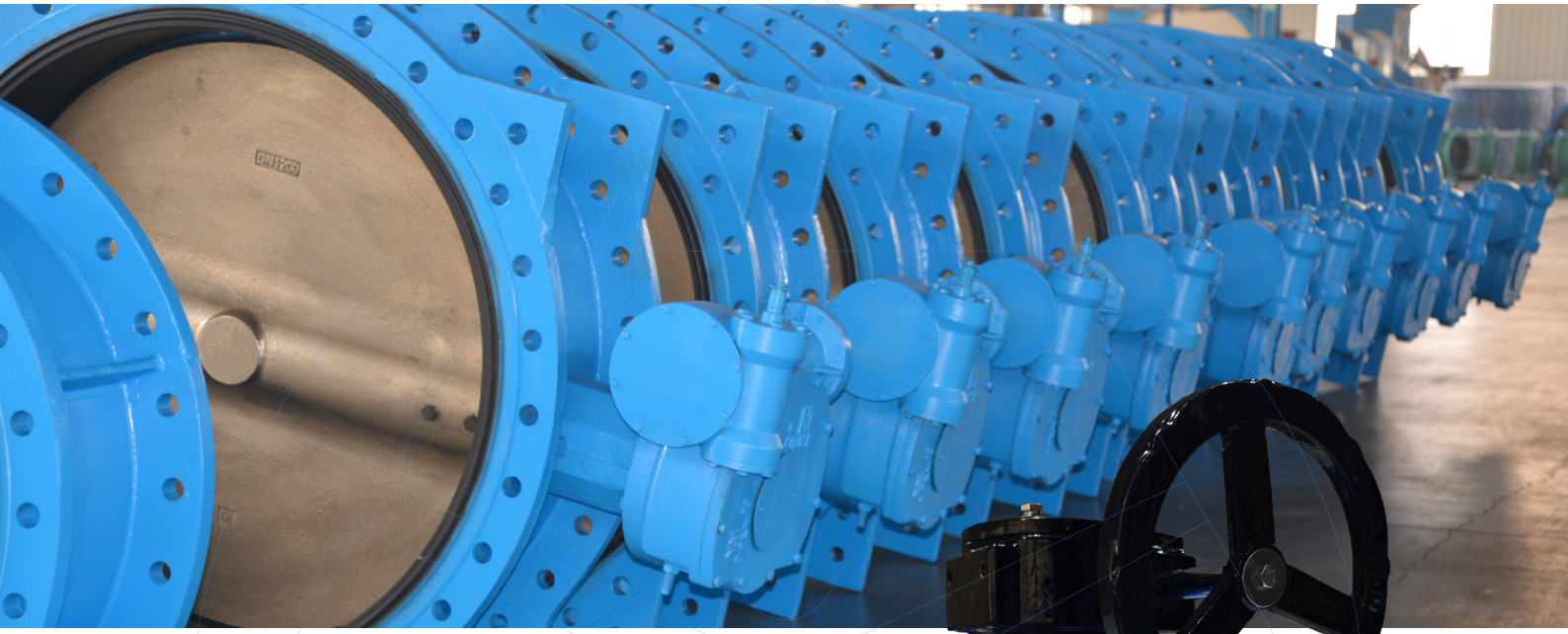

Application

Water supply and distribution
Pumping stations and water treatment plants
Irrigation and cooling water systems
HVAC installations
Pressurized air systems
Industrial applications

Approvals/Standards

Design: EN 593
Face to Face: EN 558-1 Series 13
Mounting between flanges: PN10/16 EN 1092-2, ISO 7005-2.
Pressure Tests acc. to EN 12266-1 Rate A. GB/T13927-1992
Pressure Tests: Body: 1,5 x PN. Seat: 1,1 x PN
EU directive 2014/68/EU:
Products excluded, article 1, § 2b up to DN300.
Risk Category I MoD. A from DN350 to DN600

Range

DN50-3000, PN10-16

GENERAL CHARACTERISTICS

Concentric disc valves.
Range from DN50 up to DN3000
Vulcanized seat. Does not need gaskets for installation.
100% Tightness in both directions.
Low head loss.
Top flange according to ISO 5211.
Low torque values.
Different desings with shaft in 1 or 2 pieces, with and without pin.

WORKING CONDITIONS

Maximum working pressure: 16 bar.
Working temperature:
- Min. temperature: -10ºC
- Max. temperature: 110ºC (130ºC temporarily)

Suitable media according to seat and disc material.

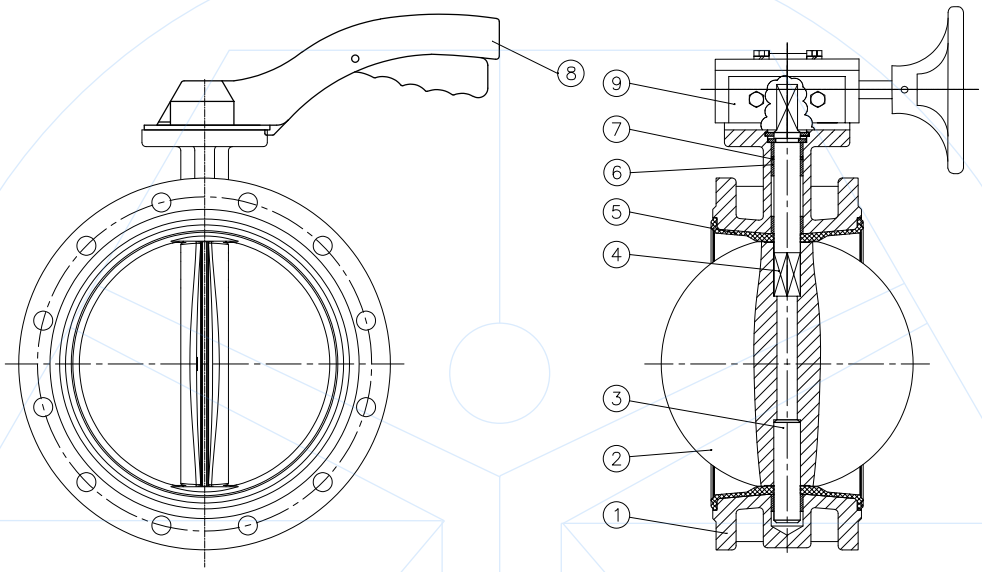

Nº	ITEM	MATERIAL (Standard / options)
1	Body	GJS400-15 / GJL-200
2	Bottom shaft	AISI 410 / AISI 420, AISI 316, AISI 416
3	Disc	GJS400-15 / CF8M, Al-Bronze, CF8, CF3, CF3M
4	Upper shaft	AISI 410 / AISI 420, AISI 316, AISI 416
5	Seat	EPDM / NBR, PTFE, FKM, Neoprene
6	Bushing	PTFE / Lubricated bronze
7	O-ring	EPDM / NBR, PTFE, FKM, Neoprene
8	Lever	Aluminum / Cast iron, carbon steel
9	Gearbox	GJL250 / GJS400-15
	RAL 5015 Painting	Epoxy 250 µm for body
	RAL 9005 Painting	Epoxy 250 µm for disc

Components may be replaced with materials of equivalent or superior grade without prior notice, in accordance with our continuous improvement policy.

Disclaimer: Although care has been taken to ensure the accuracy of this information, users must verify product suitability for their specific application. Dimensions are nominal and should be confirmed if critical. No warranty, express or implied, is given unless stated in a formal agreement. Check more information at: davincivalves.com or contact us at: valves@davincivalves.com

DIMMENSIONS FOR VALVES

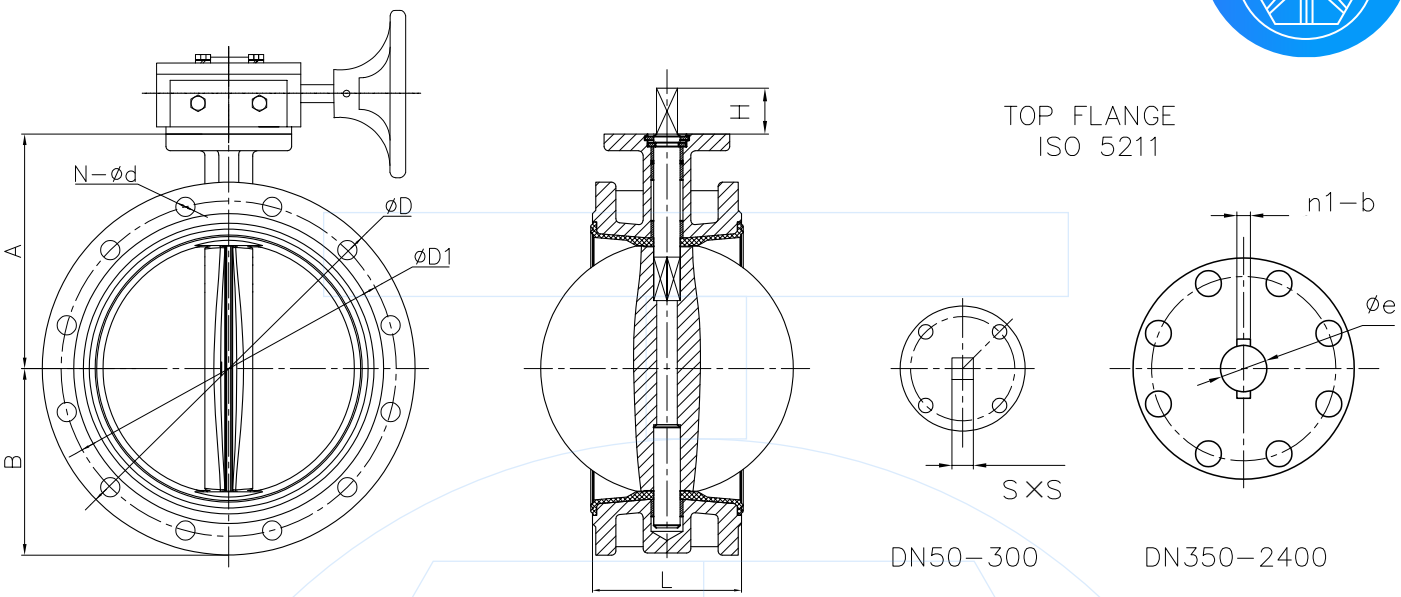

DN	A	B	L	PN10			PN16			150LB			ISO 5211	H	S	Øe	n1-b
				ØD	ØD1	n-Ød	ØD	ØD1	n-Ød	ØD	ØD1	n-Ød					
50	130	83	108	165	125	4-19	165	125	4-19	150	120.7	4-19	F05	25	9	--	--
65	140	93	112	185	145	4-19	185	145	4-19	180	139.7	4-19	F05	25	9	--	--
80	149	100	114	200	160	8-19	200	160	8-19	190	152.4	4-19	F05	25	9	--	--
100	156	110	127	220	180	8-19	220	180	8-19	230	190.5	8-19	F07	28	11	--	--
125	177	125	140	250	210	8-19	250	210	8-19	255	215.9	8-22	F07	28	14	--	--
150	200	143	140	285	240	8-23	285	240	8-23	280	241.5	8-2	F07	28	14	--	--
200	225	170	152	340	295	8-23	340	295	12-23	345	298.5	8-22	F10	35	17	--	--
250	280	203	165	395	350	12-23	405	355	12-28	405	362	12-26	F10	40	22	--	--
300	309	230	178	445	400	12-23	460	410	12-28	485	431.8	12-26	F10	40	22	--	--
350	325	260	190	505	460	16-23	520	470	16-28	535	476.3	12-29	F10	40	22	--	--
400	371	290	216	565	515	16-28	580	525	13-31	595	539.8	16-29	F14	52	27	--	--
450	392	330	222	615	565	20-28	640	585	20-31	635	577.9	16-32	F14	52	27	--	--
500	431	358	229	670	620	20-28	715	650	20-34	700	635	20-32	F14	64	32	--	--
600	536	435	267	780	725	20-31	840	770	20-37	815	749.3	20-35	F16	70	36	--	--
700	577	455	292	895	840	24-31	910	840	24-37	925	863.6	28-35	F25	95	--	63.35	2-18
800	623	553	318	1015	950	24-34	1025	950	24-40	1060	977.9	28-41	F25	95	--	63.35	2-18
900	680	630	330	1115	1050	28-34	1125	1050	28-40	1170	1085.8	32-41	F25	130	--	75	2-20
1000	735	680	410	1230	1160	28-37	1255	1170	28-43	1290	1200.2	36-41	F25	130	--	85	2-22
1100	810	743	450	1340	1270	32-37	1355	1270	32-43	1405	1314.4	40-41	F30	150	--	95	2-22
1200	915	810	470	1455	1380	32-40	1485	1390	32-49	1510	1422.5	44-41	F30	150	--	105	2-28
1300	958	907	490	1575	1490	32-43	1585	1490	32-49	1626	1537	44-48	F35	200	--	120	2-36
1400	1007	942	530	1675	1590	36-43	1685	1590	36-49	1746	1651	44-48	F40	200	--	120	2-36
1500	1081	1018	570	1785	1700	36-43	1820	1710	36-56	1854	1759	52-48	F40	200	--	140	2-36
1600	1157	1050	600	1915	1820	40-49	1930	1820	40-56	1985	1875	52-48	F40	200	--	140	2-36
1800	1202	1151	670	2115	2020	44-49	2130	2020	44-56	2197	2096	60-48	F48	280	--	160	2-40
2000	1360	1345	760	2325	2230	48-49	2345	2230	48-62	--	--	--	F48	280	--	160	2-40
2200	1530	1500	800	2550	2440	52-56	2555	2440	52-62	--	--	--	F60	300	--	180	2-45
2400	1650	1610	850	2760	2650	56-56	2765	2650	56-62	--	--	--	F70	300	--	200	2-45

The designs, materials and technical specifications indicated herein are subject to modification without prior notice, as part of the continuous development of our manufacturing programme, product refinement and technological advancement.

Disclaimer: Although care has been taken to ensure the accuracy of this information, users must verify product suitability for their specific application. Dimensions are nominal and should be confirmed if critical. No warranty, express or implied, is given unless stated in a formal agreement. Check more information at: davincivalves.com or contact us at: valves@davincivalves.com

TORQUE (N·m)

DN	Bares-haft Torque	Ratio	Output Torque	ISO 5210
50	19.2	36:1	2,3	F10-B3
65	30.9	36:1	3,7	F10-B3
80	39.6	36:1	4,8	F10-B3
100	64.8	36:1	7,8	F10-B3
125	101.8	36:1	12,3	F10-B3
150	147.8	36:1	17,8	F10-B3
200	240	36:1	28,9	F10-B3
250	380	36:1	45,8	F10-B3
300	538	50:1	46,6	F10-B3
350	680	50:1	58,9	F10-B3
400	1439	532:1	29,3	F10-B3
450	1827	532:1	37,2	F10-B3
500	1925	532:1	39,2	F10-B3
600	3107	640:1	52,6	F10-B3
700	4798	704:1	73,8	F10-B3
800	7426	704:1	114,3	F10-B3
900	10020	832:1	130,5	F14-B3
1000	13555	832:1	114,7	F10-B3
1200	19800	1152:1	186,2	F14-B3
1400	30000	1280:1	253,9	F14-B3

For valves over DN1400, consult.
Bareshaft torque values DON'T include security margin.
Output torque values include 1,3 security margin.

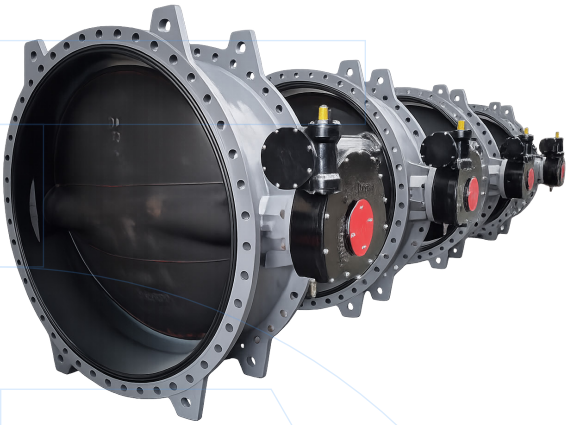

Cv values

DN	10°	20°	30°	40°	50°	60°	70°	80°	90°
50	0.06	3	7	15	27	44	70	105	115
65	0.1	6	12	25	45	75	119	178	196
80	0.2	9	18	39	70	116	183	275	302
100	0.3	17	36	78	139	230	364	546	600
125	0.5	29	61	133	237	392	620	930	1022
150	0.8	45	95	205	366	605	958	1437	1579
200	2	89	188	408	727	1202	1903	2854	3136
250	3	151	320	694	1237	2049	3240	4859	5340
300	4	234	495	1072	1911	3162	5005	7507	8250
350	6	338	715	1549	2761	4568	7230	10844	11917
400	8	464	983	2130	3797	6282	9942	14913	16388
450	11	615	1302	2822	5028	8320	13168	19752	21705
500	14	791	1647	3628	6465	10698	16931	25396	27908
600	22	1222	2587	5605	9989	16528	26157	39236	43116
700	31	1703	3605	7813	13961	23037	36459	54689	60102
800	37	2080	4406	9546	17010	28147	44545	66818	73246
900	100	2436	5272	10636	18025	29440	47622	70876	77897
1000	260	3050	6730	12740	20220	32500	52500	79600	87500
1200	313	3665	8089	15942	24299	39056	63093	95660	105154

For valves over DN1200, consult.

Disclaimer: Although care has been taken to ensure the accuracy of this information, users must verify product suitability for their specific application. Dimensions are nominal and should be confirmed if critical. No warranty, express or implied, is given unless stated in a formal agreement. Check more information at: davincivalves.com or contact us at: valves@davincivalves.com

CONTACT US

DAVINCI VALVES
ORDER REQUEST

Ref. 114A-WT / PN 10-16

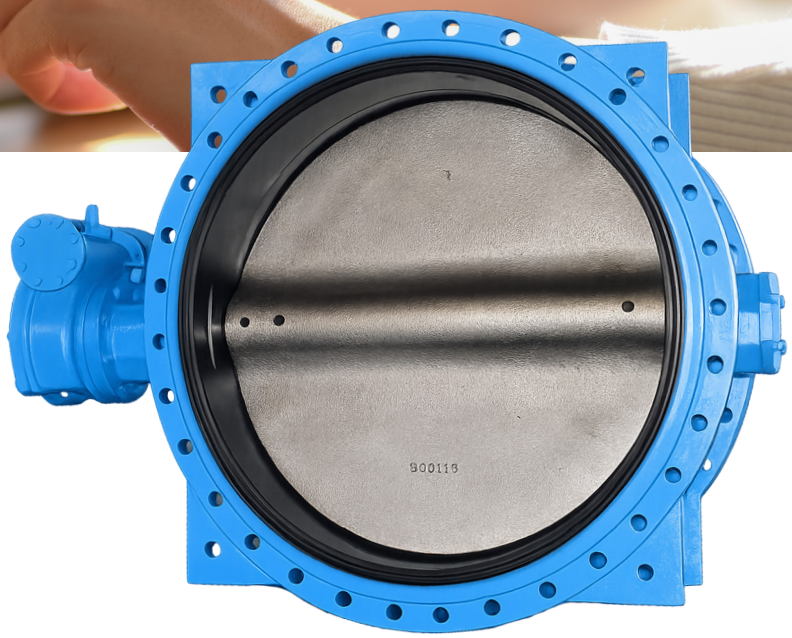

Head Office CHENGDU
Room 3208 Unit 1 Building 1,
No. 6 Zhiquan Section, Dongda Street
Jinjiang District, Chengdu, Sichuan
CHINA

+86 17340168233 +86 19302892712
valves@davincivalves.com

Europe Office MADRID
SPAIN
zuzana@davincivalves.com

WEBSITE
davincivalves.com

YOUR QUALITY WATER PROJECTS PARTNER
For professionals who look for more.